तेल उद्योग सुरक्षा निदेशालय
Oil Industry Safety Directorate
ISO 9001:2015 certified

सुरक्षा संवाद
Suraksha Samwad

An opportunity to learn from mistakes....

Disclaimer

"Presentations are intended for educational purpose only and do not replace independent professional judgement. Statement of facts and opinions expressed in the presentations are solely those of the presenter and unless expressly stated to the contrary, are not the opinion or position of the Oil Industry Safety Directorate (OISD). OISD does not endorse or approve and assumes no responsibility for the content, accuracy, reliability and completeness' of the information provided herein."

Presented by :



Sh. Subhajit Sarkar
Chief General Manager (TS & HSE), Gujarat Refinery

Sh. Subhajit Sarkar joined IOCL in 1993 at Haldia Refinery. He worked in MIS Dept for 5 years and after that in Production department for 1 year. Thereafter, he was involved in commissioning of Panipat Refinery's Atmospheric & Vacuum Distillation Unit (AVU) in 1998. At Panipat he worked in various capacities in AVU, OHCU, CRU, FCCU, DHDS, HGU and VBU over a span of 15 years before joining Gujarat Refinery in 2012 Technical Services dept. Presently as, CGM(TS&HSE), he is looking after H, S & E, Fire & Safety and QC apart from Process Monitoring, Process Project, Refinery Planning and Coordination, ENCON etc.

A Chemical Engineer from BIT, Sindri and an MBA from MDI, Gurgaon, Sh. Sarkar has extensive experience in plant operations, commissioning of Green Field & Brown Field Projects, Process Safety Management etc. His current engagement includes steering the various projects at Gujarat Refinery involving capacity expansion and enhancing petrochemical & lube footprint of Indian Oil Corporation.

For Educational Purpose



IndianOil

Suraksha Samvad

For Educational Purpose

Learnings from

"Fire in Crude Distillation Unit leading to a Fatality"



Brief Description of the Unit

Incident: Fire broke out in Crude Distillation Unit's Naphtha Stabilizer Column Reboiler pump discharge line at around 00:03 hrs leading to burn injuries to 4 persons, one of whom succumbed after 1 week

Description of the Unit:

- Crude Distillation Unit, processing LS Crude
- Commissioned in 1966 through Russian collaboration

For Educational Purpose

Chronology of the Events leading to the Incident

- Planned shutting down activities were in progress – depressurising / flushing / steaming etc.
- De-contamination agency was lined up for HC freeing of equipment & circuits before handing over
- Naphtha Stabiliser Column, with 100% level, was required to be emptied out
- This was old unit and does not have facility to drain the column to Closed Blow Down System (CBD).
- Column used to be earlier emptied out to nearby OWS, with the help of hose, in controlled manner.
- This practice was considered unsafe hence it was decided to transfer the column liquid to Naphtha Splitter Section Feed Surge Drum of the adjacent Unit (which was running).

For Educational Purpose

Chronology of the Events leading to the Incident

- For this activity, a temporary line was fabricated and planned to be connect from the discharge of Stabiliser Reboiler Pump (P-14) to Main Fractionator Overhead Pump's Discharge line which was connected to adjacent unit's Naphtha Splitter Feed Surge Drum
- However, this line could not be connected to P-14 discharge as P-14 could not be isolated due to passing of suction / discharge valves
- In the evening, joint decision was taken by Maint. and Production team to connect P-14A discharge to E-2 run down line through flexible hose connection as Maint. Informed that modifying the fabricated line as mentioned in Point no.-5, will take about 1 -2 days

For Educational Purpose

SCHEMATICS – SHOWING ENVISAGED PIPE CONNECTION

Temporary piping was made by PN/MN earlier to transfer naphtha from K5 but it was observed that suction valve of pump was passing hence isolation was not possible

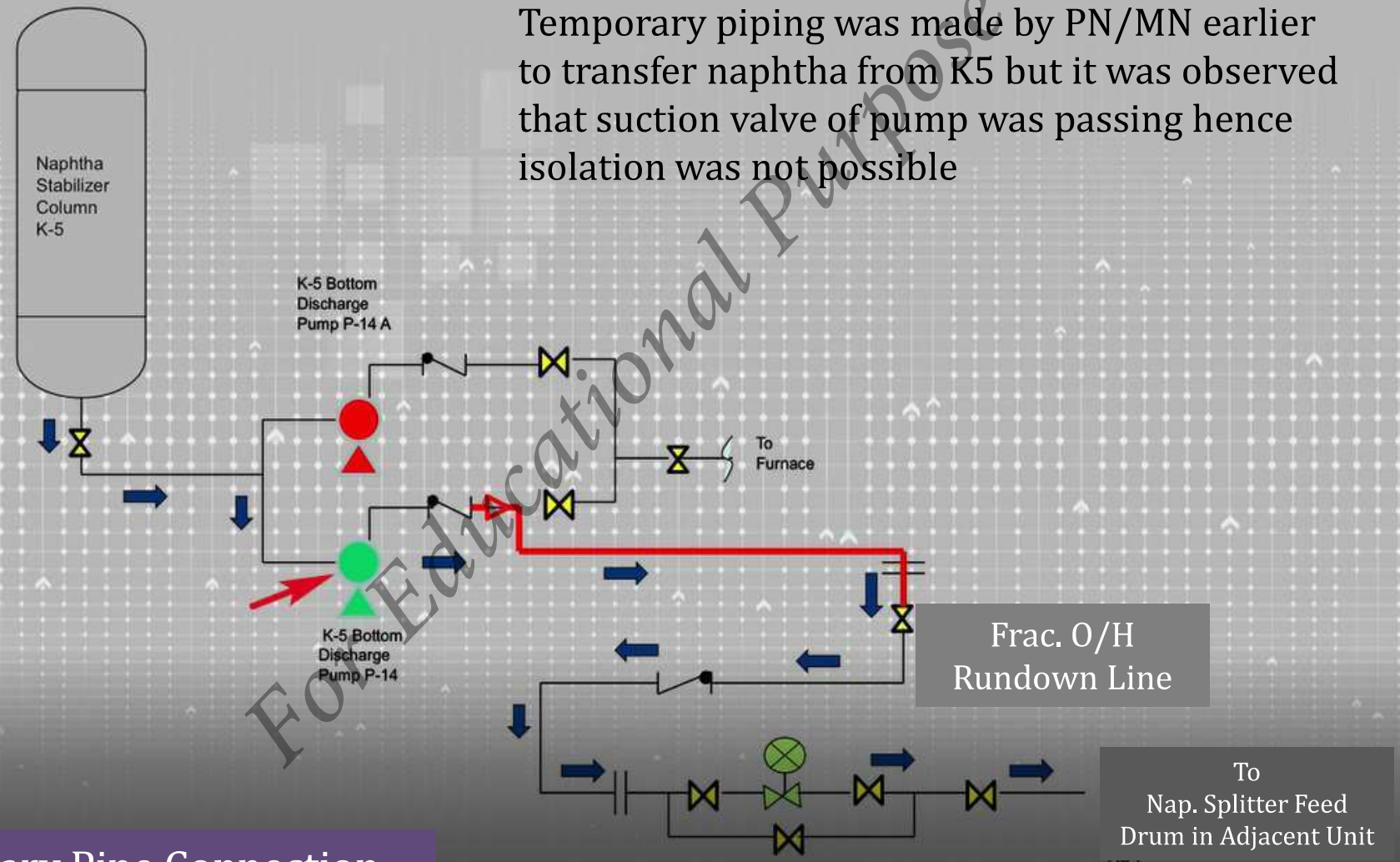

Temporary Pipe Connection

For Educational Purpose

SCHEMATICS – SHOWING HOSE CONNECTION

Thus, a flexible SS hose of 4” Dia was made available to meet the requirement. 2 hoses of 5mt. Each were connected with flanged connection.

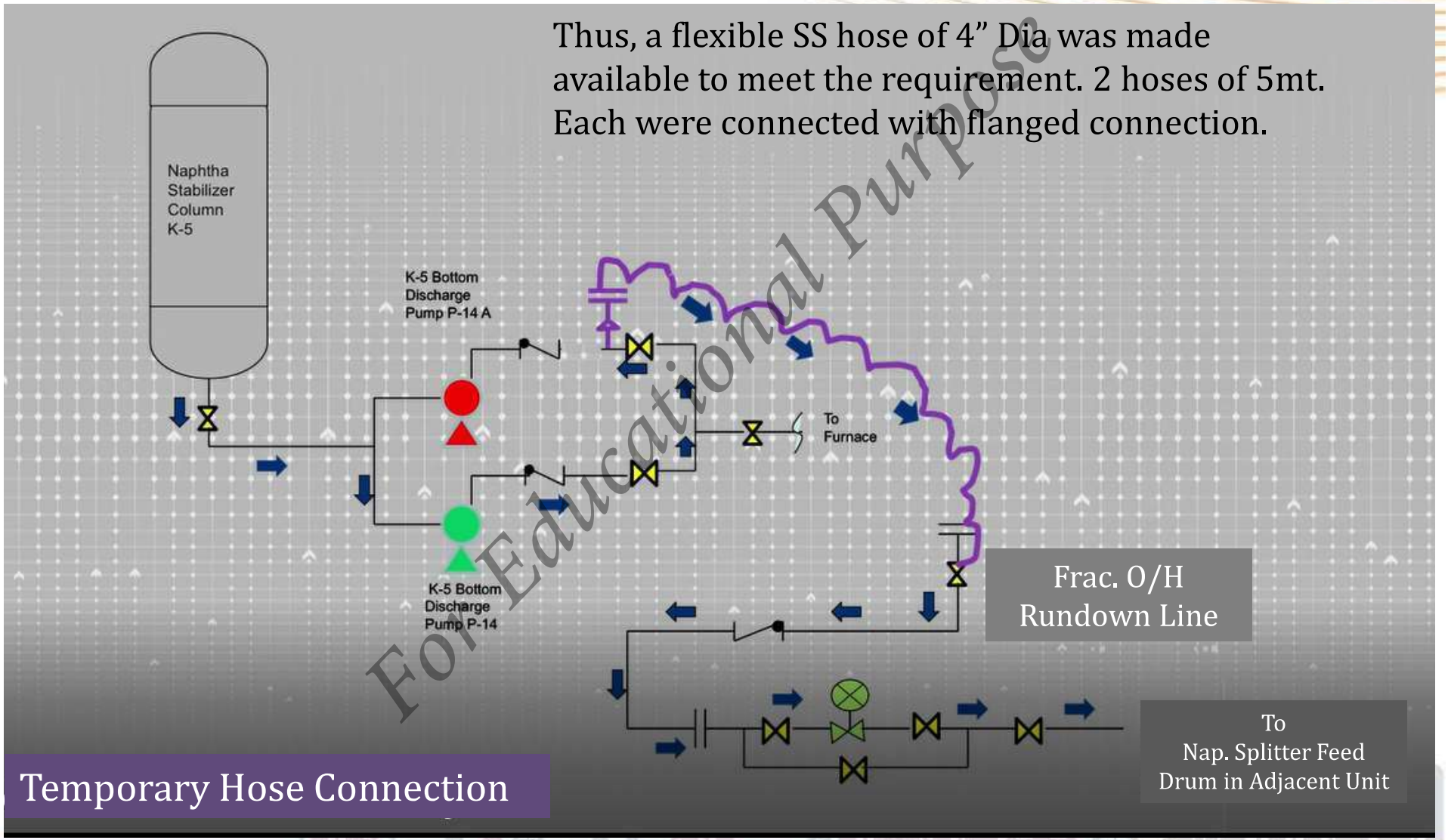

Temporary Hose Connection

For Educational Purpose

Contd..

- As jointly decided by Maint. and Production, The flexible SS hoses, brought by decontamination agency, were used for this job. It was also informed that such flexible SS hoses were used during a previous shutdown in May-June 2014.
- Two no. of hoses were shifted at site and connected instead of temporary piping planned originally. The physical condition of hoses appeared to be new.
- After completion of flexible hoses connection, the site was handed over back to Production at about 23.30 hrs.
- The line-up was made by production personnel and valves were cracked open to check the leak if any as stated no leak was found at Stabiliser pressure of 5.7 Kg/cm2.
- Pressure at the Naphtha Splitter Feed Surge Drum (Receiving end) was 1.3 kg/cm2.

For Educational Purpose

Contd..

- Initially as per plan, Stabiliser Naphtha transfer was attempted through Gravity. It was noticed that transfer was not taking up and same was confirmed by Panel operator also. The line up at the receiving unit was confirmed by concerned personnel from that unit.

- In this situation Production personnel decided to transfer the Stabiliser Naphtha by running Pump P-14.

For Educational Purpose

Situation After the Incident

- After the pump was started, one flexible hose ruptured due to excessive pressure.



- Pump house Operator, who started the pump had informed that he had seen the pressure gauge as the pressure was shooting up rapidly, it was ~15 Kg/Cm2. He immediately escaped to a safe location.

- Due to rupture of flexible SS hoses, Naphtha started gushing out from 100 mm flexible SS hose and huge quantity of naphtha spilled out in the pump-house resulted huge vapour cloud as well as large pool of naphtha.

For Educational Purpose

Situation After the Incident

- In this situation all operating personnel rushed away from site and shouted to evacuate the unit. Pump House operator and Shift-Incharge witnessed the rupturing of SS Flexible hose and its snaking. Shift-Incharge was drenched with naphtha and fell down twice while escaping and suffered bruises on both arms but managed to reach control room safely.
- The pump house operator informed panel operator to immediately stop pump P-14A from substation through talk back system and later by telephone from check and change room. Panel operator seen the situation in CCTV and gave fire call to fire control room at 00:03 hrs.

For Educational Purpose



Location of Fire

Contd..

- After getting the fire call, fire fighting crew immediately swung into the action and within two minutes reached at site. Total 3 fire tenders arrived
- They saw that entire pump house and surrounding area is totally engulfed in white vapour cloud
- Immediately after this, they heard huge explosion and the area was totally engulfed in the fire
- Some time after this, three more explosions, were heard.
- The fire continued from 00:03 Hrs. to 0130 Hrs.

Pipes Twisted and Ruptured due to fire

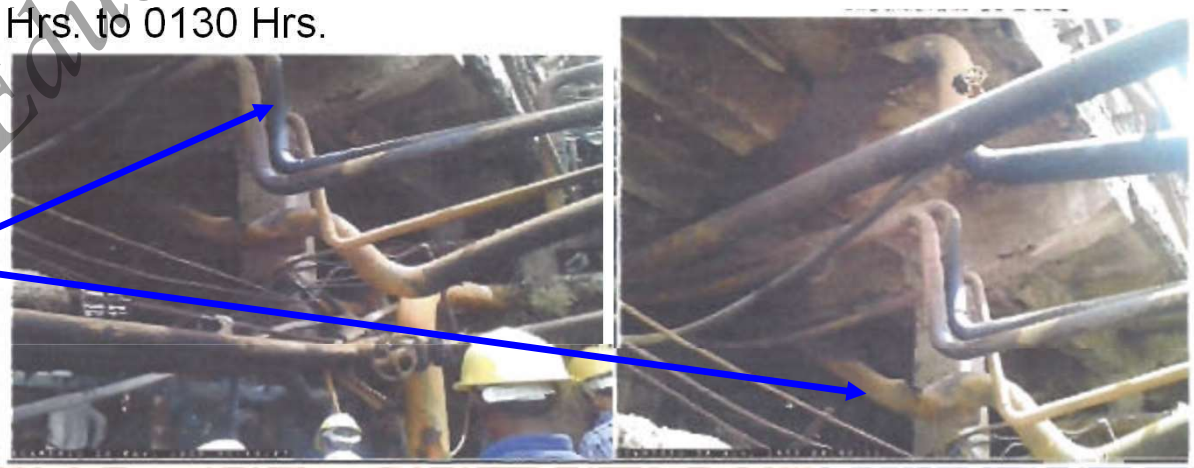

For Educational Purpose

Analysis of Incident (Probable Cause)

In case of Fire Probable Source of Fuel

- The flexible SS hose ruptured due to excess pressure.
- The transfer of Naphtha from K-5 should have started through gravity itself as the pressure in K-5 was 5.7 Kg/Cm2 and that of V-1 was 1.3 Kg/Cm2.
- It appears that the line-up was not correct. No efforts were made to analyse the cause of “No Flow” in spite of having 4.4 Kg/Cm2 differential pressure. The control valve (2FC 2464) opening was also not checked in the field physically as narrated during interrogation.
- The flexible SS hose were tested at 7.0 Kg/Cm2 as stated by Decontamination party representative.
- Due to this failure huge quantity of Naphtha gushed out from the ruptured SS flexible hose and resulted in large pool of naphtha and huge vapour cloud. This condition continued for app. 5 minutes.

For Educational Purpose

Contd..

In case of Fire Probable Source of Spark

The entire area was thoroughly investigated and as per the interview of fire fighting crew and others, following 3 possibilities were emerged –

- Due to bursting of SS hose and snaking action, spark might have developed resulting fire

- P-4 pump motor cooler and canopy thrown away from its motor after shearing of bolts. It was confirmed by the operating personal that P-4 was running at that time. As per the Electrical Deptt. records it is established that this pump motor was tripped at 00.07 hrs. on 23.8.15. as per the timing, pump motor thrown away just after the vapour cloud explosion. With this it is established that motor thrown away was the result of vapour cloud explosion. In addition to this, this is also noted that motor is flame proof and found to be healthy condition after the explosion. Hence possibility of ignition from this pump motor is ruled out.

- Contact with Hot Surface – No such Hot Surface found in HC service as Plant was already shutdown, but MP Steam Lines were there. However, insulation and cladding of these lines were found intact.

Hence snaking of the ruptured metallic hose could have created the spark

For Educational Purpose

Cause

Basic Cause of Incident: Failure of flexible SS Hoses due to Excessive pressure caused by improper line up.

Root Cause of Incident: Non standard procedure adopted without proper care and checks.

For Educational Purpose

Lapses if any -

- Temporary piping was planned without following proper procedure i.e. MOC and proper scheme.
- The above piping could not be connected as P-14 suction / discharge valves were not holding. Joint decision of fixing the flexible SS hose was planned.
- SS flexible Hoses were borrowed from Decontamination Agency, for this job. The intended use and service was not informed to Decontamination Agency. Due to this, hoses tested at low pressure (7.0 Kg/Cm2 – as informed by the party representative) were decided to use.
- As the no flow condition was observed during the gravity transfer, attempt was not made to cross check the line up. Over and above, instead of cross checking of line up, decision was taken to transfer naphtha by running Pump No. P-14(shut off pressure – 17.4 Kg/Cm2). This was also considered major lapse and main reason of this incident.

Sequence of Lapses –

1. No proper and safe draining facility for K-5 column since design stage.
2. The earlier practice to drain K-5 material to OWS was considered unsafe and hence alternate scheme was thought of by providing temporary line as mentioned above, was a good decision, however the MOC was not followed.
3. The joint decision of fixing of SS flexible hoses without confirming the test pressure / hydrotesting
4. Improper line up
5. Decision of running the pump without finding out the reason of no flow condition during gravity transfer

For Educational Purpose

Recommendations

Immediate:

Actions taken at site to control the situation:

- Immediately pump P-14 was stopped from the substation
- Fire fighting action to control the situation
- Major fire declared and help from mutual aid members pressed into the service
- Injured persons were shifted to hospital promptly
- Required isolation to cut off the fuel supply was done by isolating at following locations :
  - ❖ P-14 / 14A suction and discharge valves
  - ❖ K-5 bottom valve
  - ❖ K-5 gas back up line
  - ❖ H-6 (Frac O/H Nap. Pump) discharge valve

For Educational Purpose

Contd..

Medium term:

- In AU-II, permanent closed draining facility to be provided for K-5 column and other columns / vessels/ pumps where permanent draining facility were not provided.
- To be horizontally deployed in other such Units
- Both CBD vents are observed to be routed to atmosphere needs to be connected to flare header.
- Fire fighting facilities were not complying OISD-116. Relevant Gap in OISD-116 Clause-4.2.5

  - *Water Spray System … for Pumps handling Petroleum Products Class-A products under pipe rack* - not provided for P-14 and 14A.

For Educational Purpose